Received 17 October 2023
Revised 5 November 2023
Accepted 5 November 2023

Research on uninterruptable power supply technology for auxiliary winding of electric locomotive while passing the neutral section

Yuliang Du
Locomotive and Car Research Institute, China Academy of Railway Sciences, Beijing, China

Abstract

Purpose – Auxiliary power system is an indispensable part of the train; the auxiliary systems of both electric locomotives and EMUs mainly are powered by one of the two ways, which are either from auxiliary windings of traction transformers or from DC-link voltage of traction converters. Powered by DC-link voltage of traction converters, the auxiliary systems were maintained of uninterruptable power supply with energy from electric braking. Meanwhile, powered by traction transformers, the auxiliary systems were always out of power while passing the neutral section of power supply grid and control system is powered by battery at this time.

Design/methodology/approach – Uninterrupted power supply of auxiliary power system powered by auxiliary winding of traction transformer was studied. Failure reasons why previous solutions cannot be realized are analyzed. An uninterruptable power supply scheme for the auxiliary systems powered by auxiliary windings of traction transformers is proposed in this paper. The validity of the proposed scheme is verified by simulation and experimental results and on-site operation of an upgraded HXD3C type locomotive. This scheme is attractive for upgrading practical locomotives with the auxiliary systems powered by auxiliary windings of traction transformers.

Findings – This scheme regenerates braking power supplied to auxiliary windings of traction transformers while a locomotive runs in the neutral section of the power supply grid. Control objectives of uninterrupted power supply technology are proposed, which are no overvoltage, no overcurrent and uninterrupted power supply.

Originality/value – The control strategies of the scheme ensure both overvoltage free and inrush current free when a locomotive enters or leaves the neutral section. Furthermore, this scheme is cost low by employing updated control strategy of software and add both the two current sensors and two connection wires of hardware.

Keywords Electric locomotive, Auxiliary system, Neutral section, Uninterruptable power supply, Overvoltage, Inrush current

Paper type Technical paper

1. Introduction

In China as well as in many other countries, electric locomotives are powered by single-phase AC voltage sources rated 25kV (Battistelli, Pagano, & Proto, 2001; Xiubing, 2007). To balance the three-phase loads and improve the utilization efficiency of electric power, the contact wire of traction power system utilizes a sectioned and phase-changed power supply method in the electrified railway (Zeliang, Shaofeng, & Qunzhan, 2011; Zeliang *et al.*, 2013; Zhengyou, Haitao, Yangfan, & Shibin, 2014; Busco *et al.*, 2003; Wang, Trillion, Xiong, & Bing, 2011). There is a segment without power supply in the electrified railway, which is called the neutral

Railway Sciences
Vol. 3 No. 2, 2024
pp. 128-142
Emerald Publishing Limited
e-ISSN: 2755-0915
p-ISSN: 2755-0907
DOI 10.1108/RS-10-2023-0040

section or phase-separation. Conventionally, locomotives' drivers have to cut off the main breaker (vacuum circuit breaker, VCB) so as to avoid transients such as overvoltage and let locomotives coast through the neutral section (Busco *et al.*, 2003; Wang *et al.*, 2011; Hee-Sang, Sung-Min, & Jae-Chul, 2012; Horinouchi, Tsukima, Tohya, & Sasao, 2004; Kosmac & Zunko, 1995). The main breaker will be reclosed while the traction systems and the auxiliary systems will restart after locomotive running into the Phase B leg. The diagram of locomotive ground's auto-passing neutral section is shown in Figure 1. 1#, 2#, 3# and 4# is the position signals where the locomotives will carry on the corresponding response operations.

The auxiliary systems provide power to auxiliary electrical equipment of locomotive such as pumps, locomotive air-conditioners, air-compressors, traction cooling fans, train cars' power, etc. Maintaining uninterruptable auxiliary power supply can ensure well living and working conditions for passengers and train drivers. Currently, the auxiliary systems which take power from DC-link voltage of traction converter have been able to maintain uninterrupted power supply by regenerative braking to maintain a constant DC-link voltage while passing the neutral section as shown in Figure 2.

The auxiliary systems, which take power from auxiliary wingding of traction transformer, always adopt AC-DC-AC converter power structure. One main locomotive's circuit schematic type, such as HXD3C locomotive in China, is shown in Figure 3, where traction converter (T-CON1, T-CON2) and auxiliary converter (A-CON1, A-CON2) are four-quadrant converters (4QC) while Rf is half-controlled bridge rectifier. Particularly, Rf provides power to train cars rated 400kVA. AC-DC-AC converter with high power factor can maintain DC voltage stability when grid voltage under fluctuation. However, the auxiliary systems which powered from auxiliary wingding cannot achieve uninterrupted power supply now while locomotive passing the neutral section.

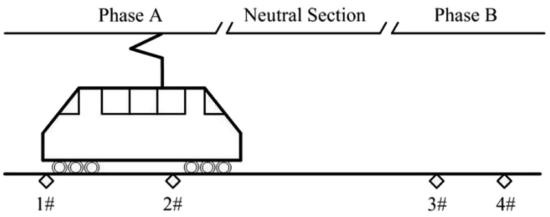

Source(s): Author's own work

Figure 1. Diagram of locomotive ground's auto-passing neutral section

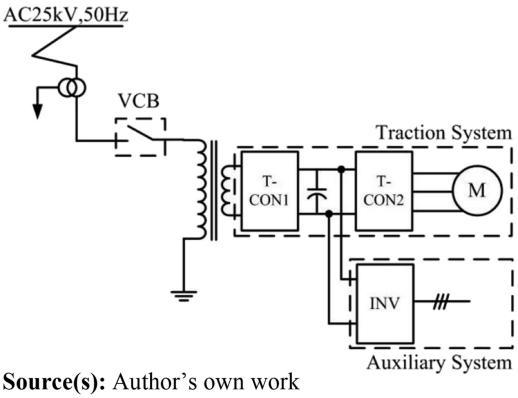

Source(s): Author's own work

Figure 2. Main circuit schematic of locomotives which auxiliary systems are powered by DC-link voltage of traction converter

Uninterrupted power supply of the auxiliary power system powered by auxiliary winding of traction transformer was studied. Vehicle-mounted auto-passing neutral section was widely used in China electric railway; its operation logic was analyzed. Control objectives of uninterrupted power supply technology are proposed, which are no overvoltage, no overcurrent and uninterrupted power supply. As route of energy coupled transfer, degree of coupling of each winding at traction transformer is very crucial. Impedance voltages of traction transformer are measured and degree of coupling of each winding, especially traction winding and auxiliary winding, is analyzed. Energy flow path to auxiliary system at the neutral section is studied and indicated that control strategies of traction 4QC and auxiliary 4QC are the core technologies. Uninterrupted power supply technology of the auxiliary system is proposed and uninterrupted power supply is achieved by adjusting control strategies of traction 4QC and auxiliary 4QC. Overvoltage and over current phenomenons will not happen during the whole process.

The major difficulties are as follows:

(1) How to adapt the control strategies of traction system and auxiliary system during the whole process of passing neutral section and

(2) How to ensure both overvoltage free and inrush current free during several processes of switchover.

Phenomenon of overvoltage and inrush current usually occurred when locomotives passing the neutral section were introduced and analyzed and some solutions were proposed in papers (Takayuki *et al.*, 2003; Eduardo, Sudip, & Ignacio, 2015; Marjan & Enrique, 1999; John & Klaus, 2001).

One scheme was proposed to eliminate overvoltage and inrush current when passing the neutral section by way of controlling primary current to zero before disconnecting the locomotive's main breaker (Eduardo *et al.*, 2015). However, zero-current is hardly realized and characteristic of the main breaker is not taken into consideration. Several other methods was put forward by modifying the hardware circuit of the existing locomotive and hardly become reality (Marjan & Enrique, 1999; John & Klaus, 2001). Similar reasons like the above-mentioned, previous solutions are hard to be popularized.

In this paper, a new scheme is proposed to make sure that the auxiliary system takes power from auxiliary winding uninterruptable power supply. This scheme is cost low by employing updated control strategy of software and add both two current sensors and two connection wires of hardware. So this scheme is also attractive for upgrading practical locomotives with the auxiliary systems powered by auxiliary windings of traction transformers. The validity of the proposed scheme is verified by simulation and

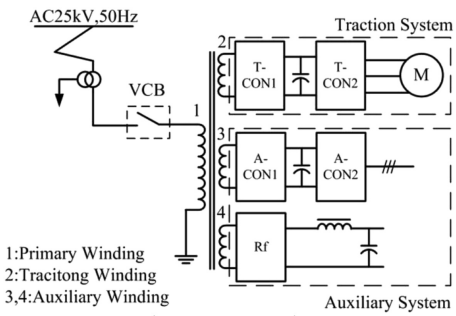

Source(s): Author's own work

Figure 3.
Main circuit schematic of locomotive which auxiliary systems are powered by auxiliary windings

experimental results and on-site operation of an upgraded electric locomotive (Yuliang *et al.*, 2015).

2. Process analysis of the locomotive passing the neutral section with uninterruptable auxiliary power supply

The whole process of locomotives passing the neutral section with uninterruptable auxiliary power supply contains several steps. The proposed scheme makes uninterruptable auxiliary power supply possible also by regenerative braking to maintain a constant DC-link voltage of traction converter (T-CON1) and the energy flow is shown in Figure 4. In the proposed scheme, if the normal operation of auxiliary system is completely unaffected before and after the several dynamic adjustment processes of the control strategy when very easily unstable, we can succeed to guarantee the uninterrupted auxiliary power supply. So in this paper we focus on the normal operation condition of auxiliary system during the process of dynamic adjustment and the proposed scheme can be divided into three stages according to the dynamic moment:

(1) STAGE1: Process of disconnecting main breaker;

(2) STAGE2: Process of adjusting synchronous control phase for T-CON1/A-CON1/Rf and

(3) STAGE3: Process of reclosing main breaker.

Each stage includes dynamic adjustment of the control strategy.

2.1 STAGE1: process of main breaker off

In electrified railway, the main breaker must be cut off before locomotives running into the neutral section in order to avoid the overvoltage in the main transformer. So in the proposed scheme, the primary current must be controlled to an appropriate value related to the feature of main breaker, which is a vacuum circuit breaker type before the main breaker disconnecting. Specially, a less current is not easy to hold the voltaic arc of the main breaker when it cut off and the cut-off current always results in a overvoltage and therefore, the smaller current is not the better (Yuliang *et al.*, 2015).

Figure 5(a) shows the power flow before primary current controlled and both traction system and auxiliary system exchange power with catenary as blue lines show. Then, primary current sets to be controlled an appropriate value in order to achieve main breaker safely off. Therefore, in the next moment the operating condition of T-CON1 needs to be adjusted to regeneration condition and feed power to catenary and the auxiliary system as shown in Figure 5(b). The red line represents the power from the regenerative breaking feeding to the auxiliary system while the red dotted line shows that the power from the regenerative breaking feedback the grid is controllable after the process of controlling primary current. Then the main breaker can safely disconnect after above process. The control strategy of T-CON1 will be modified from close-loop control strategy to open-loop control strategy, while A-CON1 and Rf keep on their original control strategies. The power rate of T-CON1 is much larger than the auxiliary system so that can guarantee T-CON1 meets

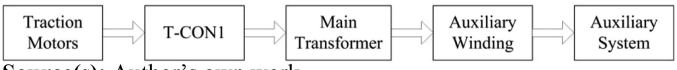

Source(s): Author's own work

Figure 4. Energy flow of locomotive during passing neutral section

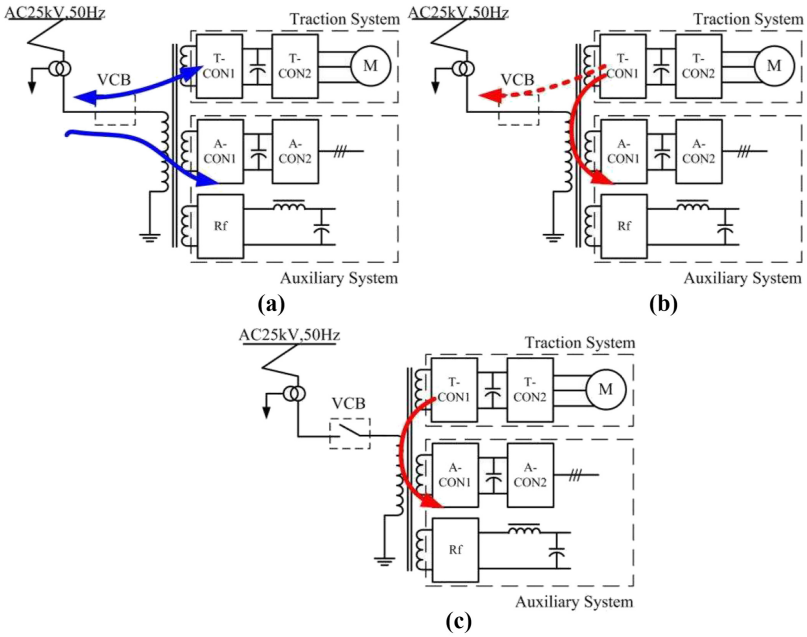

Figure 5.
The variation of power flow around the process of main breaker off

Note(s): (a) Before primary current controlling. (b) In process of primary current controlled. (c) After main breaker disconnectted

Source(s): Author's own work

the power demand of the A-CON1 and Rf at any moment. Figure 5(c) gives the power flow after main breaker disconnecting.

2.2 STAGE2: analysis of process of adjusting synchronous control phase for T-CON1/A-CON1/Rf

In STAGE2, the energy flow is same to Figure 5(c). The neutral section is no electricity, the synchronous control phase of T-CON1/A-CON1/Rf was simulated in keep with the A phase all along when locomotive under the neutral section. When running into the Phase B power arm, the control unit of locomotive is able to sample the phase of Phase B power arm. In order to avert inrush current of main transformer when reclosing main breaker, the synchronous control phase of T-CON1/A-CON1/Rf must be modified the same to the Phase of B power arm (21; 22).

Inrush current is directly related to the saturation of transformer flux which is as follows:

$$\Phi(t) = -\Phi_m[\cos(\omega t + \alpha_0) - \cos\alpha_0] \tag{1}$$

where Φ_m is the flux at time t, and α_0 is the phase when main breaker closes. Flux can reach $2\Phi_m$ when closing main breaker at $\alpha_0 = 0$. The core of main transformer has saturation feature, so the primary current can greatly increase far more than two times when the flux reaches $2\Phi_m$. In the proposed scheme, after the adjustment of the synchronous control phase, the phase of the transformer flux coordinates with the Phase B. We can obtain as follows:

$$\begin{aligned}\Phi(t) &= \int_{t_0}^{t} U_B dt + \Phi_0 \\ &= \Phi_m \cos\omega t|_{t_0}^{t} + \Phi_m \cos\omega t_0 \\ &= \Phi_m \cos\omega t - \Phi_m \cos\omega t_0 + \Phi_m \cos\omega t_0 \\ &= \Phi_m \cos\omega t\end{aligned} \tag{2}$$

The transformer flux is continuous after the process of adjustment of the synchronous control phase according to (2) and the saturation of the main transformer flux will not occur. Therefore, the inrush current is averted during the STAGE2.

2.3 STAGE3: analysis of process of reclosing main breaker

After adjusting the synchronous control phase of T-CON1/A-CON1/Rf the same to the phase of B power arm, the next step is the process of reclosing the main breaker when locomotive run out of the neutral section. The control strategy of T-CON1 finally can be modified original close-loop control strategy after closing the main breaker. The grid can exchange with T-CON1/A-CON1/Rf again. Energy flows is shown in Figure 6.

3. Analysis of traction system and auxiliary system

As shown in Figure 7, AC-DC-AC converter is utilized in traction drive system in HXD3C type locomotive. Meanwhile, the auxiliary system include two systems: APU(A-CON1 in Figure 3) and Rf. The power structure of APU is the same to traction converter (T-CON1 in Figure 3) while Rf is half-controlled bridge rectifier as shown in Figures 7 and 8.

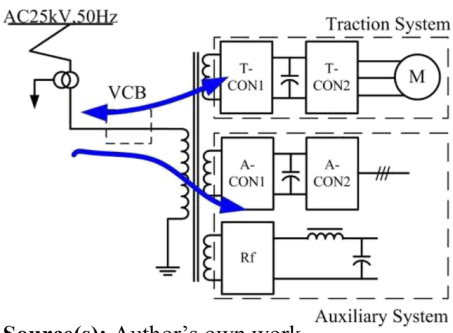

Source(s): Author's own work

Figure 6. The change of energy flow during the process of reclosing main breaker

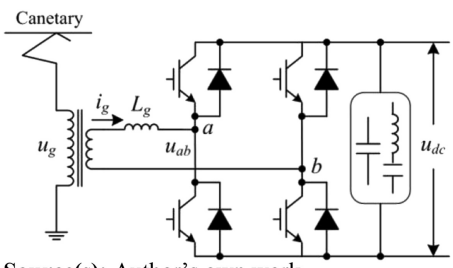

Source(s): Author's own work

Figure 7. Schematic of the T-CON1 and A-CON1

Close-loop control strategy of traction converter is shown as Figure 9. The 0 switch is chose when T-CON1 works on rectifier mode or inverter mode and control strategy of A-CON1 is similar to traction converter now. Reference amplitude value I_N* of inner current loop is determined by PI regulator of U_{dc} loop. Reference real-time current value i_N* obtains by sampling the phase of the grid voltage. P regulator is utilized to get rapid response and feed-forward control of the grid voltage can avoid the disturbance of the grid voltage.

Controlling primary current to an appropriate value before disconnecting main breaker is achieved by turn on Switch 1. Unlike the above-mentioned, reference I_N* of current loop is determined by the winding current of A-CON1 and Rf at this moment. The open-loop control strategy will be adopted on traction converter when the main breaker disconnected so as to meet the power demand of A-CON1 and Rf as shown in Figure 10 Under the open-loop control, T-CON1 is equivalents to a voltage source and adequate to the auxiliary system power rate.

Rf is a half-controlled bridge rectifier and the average value of the U_{dc} is calculated as shown (3).

$$U_{dc} = \frac{1}{\pi}\int_{\alpha}^{\alpha+\pi} \sqrt{2}E\sin\omega t\, d\omega t = \frac{2\sqrt{2}}{\pi}E\cos\alpha \tag{3}$$

where, U_{dc} and E are the DC voltage and the Rf winding voltage.

The DC voltage can be controlled by regulating phase control angle α. The control strategy is shown as Figure 11.

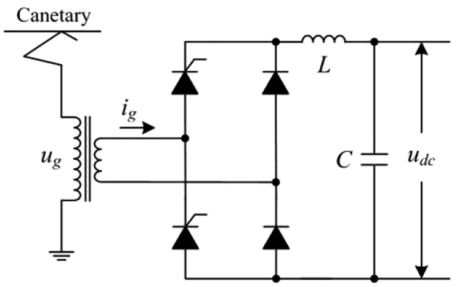

Source(s): Author's own work

Figure 8.
Schematic of the Rf

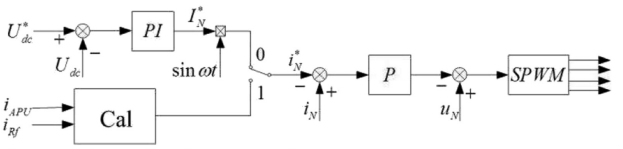

Source(s): Author's own work

Figure 9.
Close-loop control strategy of traction converter

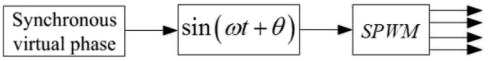

Source(s): Author's own work

Figure 10.
Open-loop control strategy of traction converter

4. Simulation verification

To verify the proposed advanced uninterrupted power supply technology for auxiliary winding of electric locomotive when passing the neutral section, the simulations based on MATLAB/Simulink have been studied. The simulation parameters of the locomotive are the same to HXD3C type locomotive as shown in Table 1.

Figure 12 gives the simulation results during STAGE1 when primary current started to be controlled at Time A (1.96s) and the main breaker disconnected at time B (2.0s) (see Table 2). Once beginning controlled the primary current, the current of the primary winding is effectively controlled to be an appropriate value as shown from Time A to Time B. Therefore, the main breaker can safely disconnect without overvoltage at winding of main transformer at Time B as illustrated in Figure 12(a). The full load normal operation of the auxiliary system

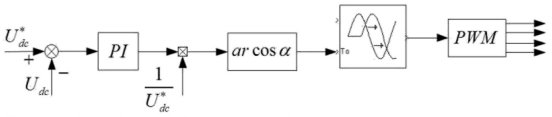

Source(s): Author's own work

Figure 11. Control strategy of Rf

	T-CON1	A-CON1	Rf
Power	1400 kVA	230 kVA	400 kVA
Input voltage	1450 V	399 V	860 V
Input current	966 A	576 A	465
DC voltage	2800 V	750 V	600 V
Switch frequency	450 Hz	2150 Hz	

Source(s): Author's own work

Table 1. Parameters of the locomotive

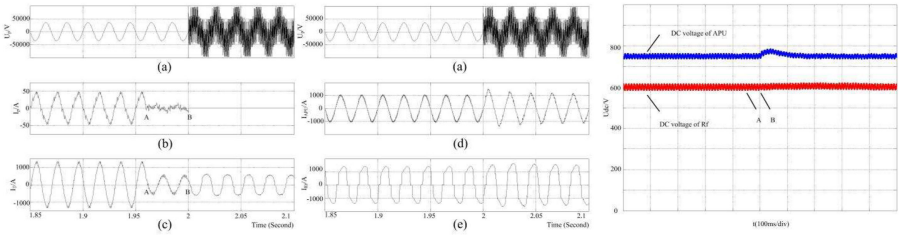

Note(s): (a) Voltage of the primary winding. (b) Current of the primary winding. (c) Current of the traction winding. (d) Current of the APU winding. (e) Current of the Rf winding

Source(s): Author's own work

Figure 12. Simulation results of around the main breaker off

	T-CON1	A-CON1	Rf
Input voltage	220 V	220 V	110 V
DC voltage	350 V	350 V	150 V
Lm	4m H	2m H	
L_3			42.5 mH

Table 2. Parameters of the T-CON1/A-CON1/Rf

during STAGE1 and the DC voltage of APU and Rf was steady as blue line and red line in Figure 12 shows. The simulation results illustrate that no overvoltage occurs at main transformer and the locomotive is on normal operating condition, so uninterrupted auxiliary power supply was achieved during the STAGE1.

As shown in Figure 13, the synchronous control phase of T-CON1/A-CON1/Rf adjustment starts at 3.0s and the winding currents achieved smooth transition from Phase A to Phase B. Hence, each converter is on normal operating condition, so uninterrupted auxiliary power supply was achieved during the STAGE2.

Figure 14 gives the simulation results during STAGE3 when main breaker reclosed at time D (4.0s). Inrush current needs to be concerned when main breaker reclosed. Once reclosed main breaker, the grid joins locomotive again and the control strategy of T-CON1

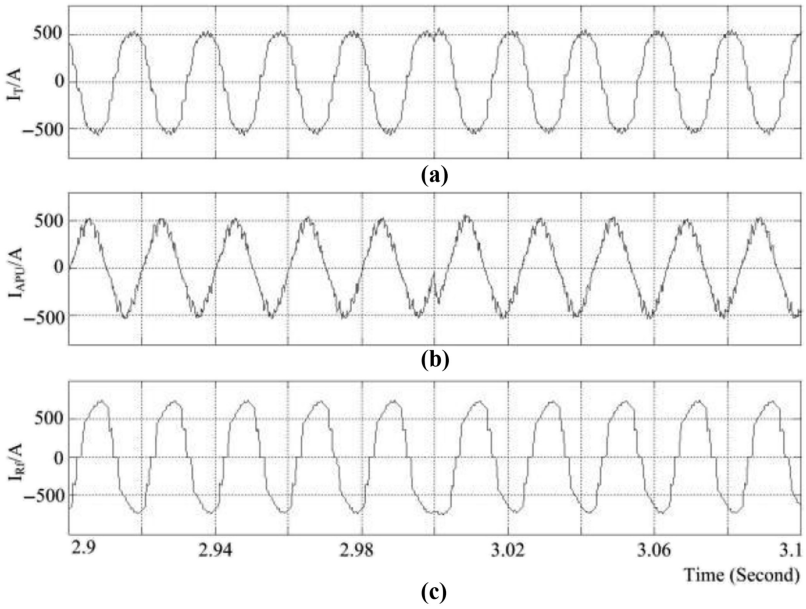

Note(s): (a) Current of T-CON1. (b) Curernt of APU(A-CON1). (c) Current of Rf

Source(s): Author's own work

Figure 13. Simulation results of current around the process of synchronous phase adjustment

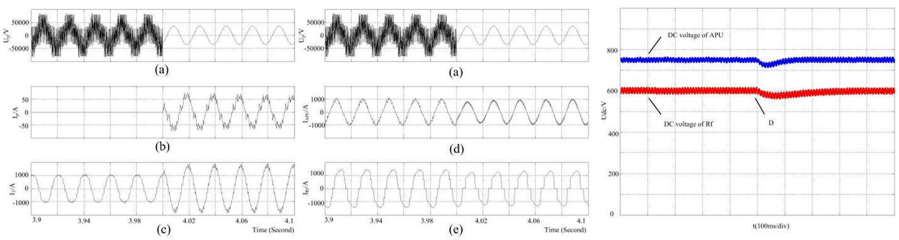

Note(s): (a) Voltage of the primary winding. (b) Current of the primary winding. (c) Current of the traction winding. (d) Current of the APU winding. (e) Current of the Rf winding

Source(s): Author's own work

Figure 14. Simulation results of when reclose the main breaker

switch to close-loop mode as shown Figure 14(a), (c). The winding current and DC voltage of A-CON1 and Rf is steady when reclosed main breaker, so uninterrupted auxiliary power supply is also achieved during the STAGE3.

5. Experimental verification

The experimental verification included two steps:

STEP1: Lab experimental verification;

STEP2: On-site operation test.

5.1 STEP1: lab experimental verification

To verify the validity of the proposed control algorithm in the neutral section, a lab power experimental platform using DSP-based controller was built and tested. The experimental test setup is illustrated in Plate 2. Two PWM rectifiers with R loads are adopted to represent the T-CON1 and A-CON1 while a half-controlled bridge rectifier represents the Rf. So, the power system of locomotive can be equivalent to this circuit. The major experimental parameters are listed as Table 1.

The experimental prototype is supplied by a 220V/50Hz utility. A small rate transformer, the same structure with locomotive's locomotive, is design and connected to the traction and auxiliary system. The control algorithm and control timing have been designed according to the above analysis (see Figures 15 and Plate 1).

Figure 16 shows the waveforms of the primary voltage and current of the transformer. A, B and D are the three dynamic moments:

(1) A: Controlling the primary current;

(2) B: Main breaker disconnecting and

(3) C: Main breaker reclosing.

As shown in Figures 16, 17, 18, the three dynamic switchovers were smooth and no overvoltage and inrush current occurred at time A, B and D. Currents and Voltages of T-CON1, A-CON1 and Rf all achieved smooth transition among different control strategies. The DC voltage of A-CON1 and Rf is steady during the whole process means that the normal

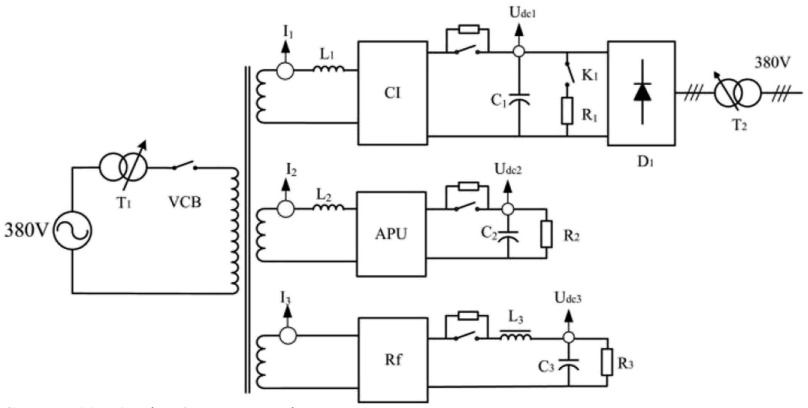

Source(s): Author's own work

Figure 15. Circuit diagram if the experimental test setup

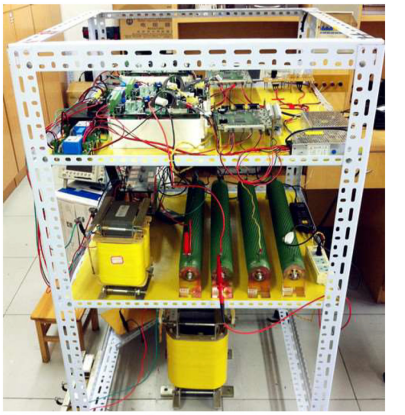

Plate 1.
Photo of the laboratory prototype

Source(s): Author's own work

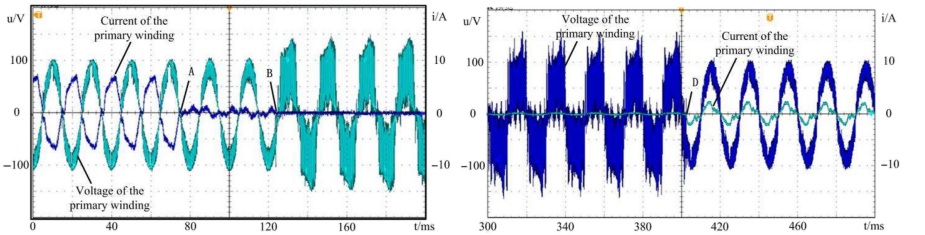

Figure 16.
Waveforms of current and voltage of primary winding

Source(s): Author's own work

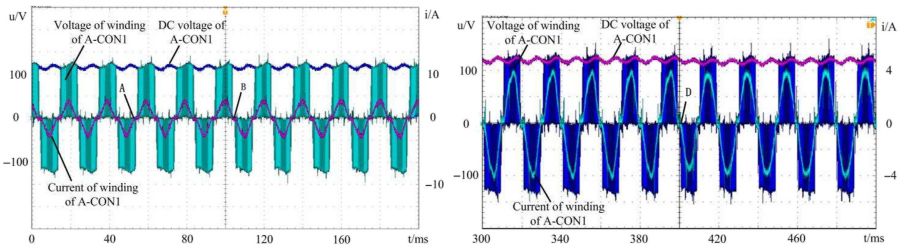

Figure 17.
Waveforms of current and voltage of A-CON1 winding

Source(s): Author's own work

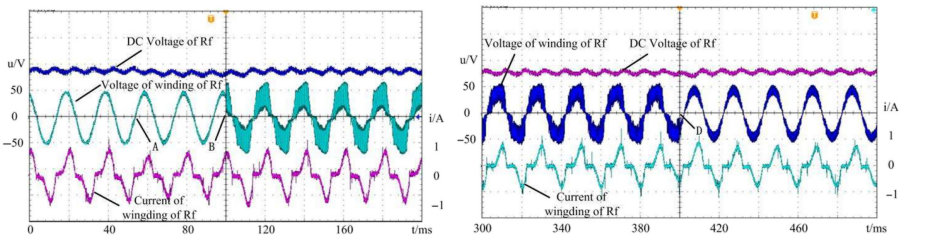

Figure 18.
Waveforms of current and voltage of Rf winding

Source(s): Author's own work

(a) (b)

Note(s): (a) layout of on-site experimental test. (b) main transformer of locomotive

Source(s): Author's own work

Plate 2. Photo of on-site operation test-rig

operation of the auxiliary system was not affected as shown in Figures 17 and 18. The lab experiment verified that uninterrupted power supply of the auxiliary system was achieved. The current and voltage were steady during the whole process of passing the neutral section.

5.2 STEP2: on-site operation test

After verifying proposed scheme valid in the lab, the high power on-site operation test was carried on. The circuit schematic of on-site operation test is exactly the same to the practical HXD3C locomotive as shown in Table 1. The on-site experimental system was built with focus on system performance and reliability. Considering the inconvenience of bringing a train car as a Rf load, Rf is removed from the auxiliary system in on-site experimental test-rig.

Layout of on-site experimental test is shown in Plate 2.

Figure 19 gives the waveforms of test-rig with practical equipment of locomotive. Main breaker disconnected at Time B, synchronous phase adjusted from Phase A to Phase B at Time C and main breaker reclosed at Time D. What we focus on are overvoltage, inrush current and DC voltage of APU. Currents and voltages of T-CON1 and A-CON1 achieved smooth transition at dynamic moment B, C and D. The DC voltage of A-CON1 is steady during the whole process means that the normal operation of auxiliary system was not affected as shown in Figure 19.

6. Conclusions

An uninterruptable power supply scheme for the auxiliary systems powered by auxiliary windings of traction transformers is proposed in this paper. This scheme regenerates braking power supplied to auxiliary winding of traction transformers while a locomotive runs in the neutral section of the power supply grid. Furthermore, the scheme is cost low just by employing updated control strategy of software and added both two current sensors and two connection wires of hardware. Energy flow path to the auxiliary system at the neutral section is studied and indicated that control strategies of traction 4QC and auxiliary 4QC are the core technologies. Uninterrupted power supply technology of the auxiliary system is proposed and uninterrupted power supply is achieved by adjusting control strategies of traction 4QC and auxiliary 4QC. Overvoltage and over current phenomenons will not happen during the

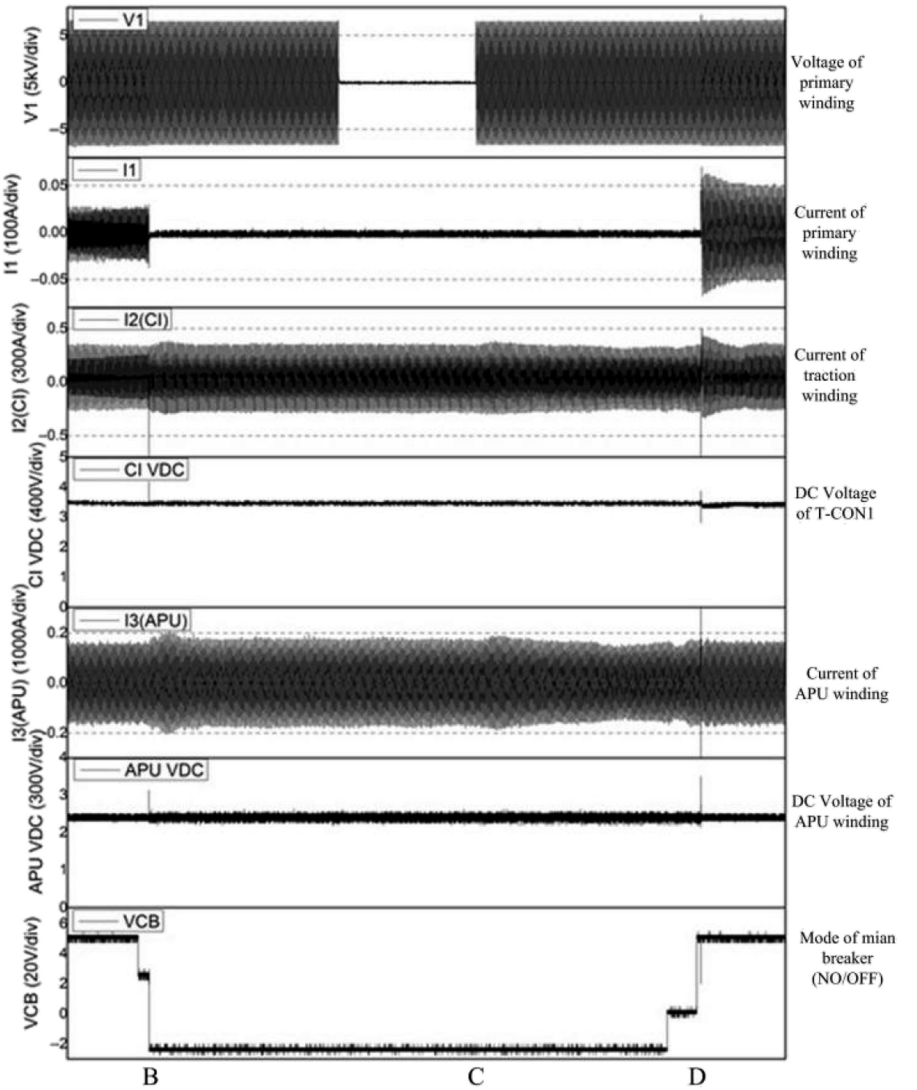

Figure 19. Waveforms of locomotive while passing the neutral section

Note(s): B: time when main breaker disconnect. C: time when start to adjust synchronous phase. D: time when main breaker reclose

Source(s): Author's own work

whole process. The control algorithms including traction converter and auxiliary converter are discussed in this paper. Simulation results validate the control strategy and proposed scheme.

A lab power experimental platform using DSP-based controller and on-site operation test was built and tested. Steady-state and dynamic performances demonstrated the effectiveness of the proposed scheme. The control strategies of the scheme ensure both overvoltage free and inrush current free when a locomotive enters or leaves the neutral section. Therefore, this

scheme is also attractive for upgrading practical locomotives with the auxiliary systems powered by auxiliary windings of traction transformers.

The test on real-locomotive is now being carried on. Further studies about the control and dynamics characteristics of the test on will be realized before long.

References

Battistelli, L., Pagano, M., & Proto, D. (2001). 2×25-kV 50Hz high-speed traction power system: Short-circuit modeling. *IEEE Transactions on Vehicular Technology*, *50*(5), 1260–1266. doi: 10.1109/25.950327.

Busco, B., Marino, P., Porzio, M., Schiavo, R., & Vasca, F. (2003). Digital control and simulation for power electronic apparatus in dual voltage railway locomotive. *IEEE Transactions on Power Electronics*, *18*(5), 1146–1157. doi: 10.1109/tpel.2003.816198.

Eduardo, P., Sudip, K. M., & Ignacio, G. (2015). Smart electrical infrastructure for AC-Fed railways with neutral zones. *IEEE Transactions on Intelligent Transportation Systems*, *16*(2), 1–2.

Hee-Sang, S., Sung-Min, C., & Jae-Chul, K. (2012). Protection scheme using SFCL for electric railways with automatic power changeover switch system. *IEEE Transactions on Applied Superconductivity*, *22*(3), 5600604. doi: 10.1109/tasc.2011.2174812.

Horinouchi, K., Tsukima, M., Tohya, N., & Sasao, H. (2004). Synchronous controlled switching by vacuum circuit breaker(VCB) with electromagnetic operation mechanism. *Proceedings DRPT*, (pp. 1–6).

John, H. B., & Klaus, J. F. (2001). Elimination of transformer inrush currents by controlled switching-part II: Application and performance considerations. *IEEE Transactions on Power Delivery*, *16*(2).

Kosmac, J., & Zunko, P. (1995). A statistical vacuum circuit breaker for simulation of transient overvoltages. *IEEE Transactions on Power Delivery*, *10*(1), 294–300. doi: 10.1109/61.368386.

Marjan, P., & Enrique, A. (1999). Overvoltages due to switching off an unloaded transformer with a vacuum circuit breaker. *IEEE Transactions on Power Delivery*, *14*(4), 1317–1326. doi: 10.1109/61.796224.

Takayuki, K., Shigeyuki, T., Ichiro, O., Tadashi, K., Susumu, N., Nobuyuki, M., . . . Toshiyuki, S. (2003). Application of controlled switching to 500-kV shunt reactor current interruption. *IEEE Transactions on Power Delivery*, *18*(2), 480–486. doi: 10.1109/tpwrd.2003.809611.

Wang, R., Trillion, Z. Q., Xiong, L., & Bing, L. (2011). Research on power electronic switch system used in the auto-passing neutral section with electric load. *Proceedings ICEMS*, (pp. 1–4).

Xiubing, T. (2007). *AC electrified railway traction power supply system* (2nd ed.). Sichuan: Publ. Southwest Jiaotong Univ.

Yuliang, D., Trillion, Q. Z., Wang, H. R., Ruixiang, Y., Xiaojie, & Youmei, L. (2015). Research on uninterrupted power supply technology for auxiliary winding of electric locomotive when passing neutral section. *Proc. APEC*, (pp. 3089–3093).

Zeliang, S., Shaofeng, X., Ke, L., Yuanzhe, Z., Xiaoqiang, N., Daqiang, Q., . . . Qunzhan, L. (2013). Digital detection, control, and distribution system for co-phase traction power supply application. *IEEE Transactions on Industrial Electronics*, *60*(5), 1831–1839. doi: 10.1109/tie.2012.2190959.

Zeliang, S., Shaofeng, X., & Qunzhan, L. (2011). Single-phase back-to-back converter for active power balancing, reactive power compensation, and harmonic filtering in traction power system. *IEEE Transactions on Power Electronics*, *26*(3), 1459–1466.

Zhengyou, H., Haitao, H., Yangfan, Z., & Shibin, G. (2014). Harmonic resonance assessment to traction power-supply system considering train model in China high speed railway. *IEEE Transactions on Power Delivery*, *29*(4), 1735–1743. doi: 10.1109/tpwrd.2013.2284233.

Further reading

Basu, K. P., & Stella, M. (2008). Reduction of magnetizing inrush current in traction transformer. *Proc. DRPT*, (pp. 1–4).

Sheng, B. (2009). Study on new method for auto-passing phase separation of AC locomotive (in Chinese), Master dissertation, Dept. Electric. ENG., Southwest Jiaotong Univ. Chengdu.

Yu, L., He, J. H., Bo, Z. Q., Li, M. X., Yip, T., & Klimek, A. (2010). Simulation and prection scheme analysis of articulated neutral section insulator in DC railway system. *Proceedings APPEEC*, (pp. 1–4).

Corresponding author
Yuliang Du can be contacted at: 943369933@qq.com